LUND UNIVERSITY

Generalized Frequency Division Multiplexing: A Flexible Multi-Carrier Modulation Scheme for 5th Generation Cellular Networks

Michailow, Nicola; Datta, Rohit; Krone, Stefan; Lentmaier, Michael; Fettweis, Gerhard

2012

Link to publication

Citation for published version (APA):
Michailow, N., Datta, R., Krone, S., Lentmaier, M., & Fettweis, G. (2012). *Generalized Frequency Division Multiplexing: A Flexible Multi-Carrier Modulation Scheme for 5th Generation Cellular Networks*. Paper presented at German Microwave Conference (GeMiC), Ilmenau, Germany.

Total number of authors:
5

General rights
Unless other specific re-use rights are stated the following general rights apply:
Copyright and moral rights for the publications made accessible in the public portal are retained by the authors and/or other copyright owners and it is a condition of accessing publications that users recognise and abide by the legal requirements associated with these rights.
• Users may download and print one copy of any publication from the public portal for the purpose of private study or research.
• You may not further distribute the material or use it for any profit-making activity or commercial gain
• You may freely distribute the URL identifying the publication in the public portal

Read more about Creative commons licenses: https://creativecommons.org/licenses/

Take down policy
If you believe that this document breaches copyright please contact us providing details, and we will remove access to the work immediately and investigate your claim.

LUND UNIVERSITY

PO Box 117
221 00 Lund
+46 46-222 00 00

Download date: 16. Oct. 2026

Generalized Frequency Division Multiplexing: A Flexible Multi-Carrier Modulation Scheme for 5th Generation Cellular Networks

Nicola Michailow, Rohit Datta, Stefan Krone, Michael Lentmaier and Gerhard Fettweis

Vodafone Chair Mobile Communications Systems,
Technische Universität Dresden, 01069 Dresden, Germany
Email: {nicola.michailow, rohit.datta, stefan.krone, michael.lentmaier, fettweis}@ifn.et.tu-dresden.de

***Abstract*—Generalized frequency division multiplexing (GFDM) is a non-orthogonal multi carrier scheme that provides flexible pulse shaping. This is attractive for various applications like machine-to-machine communications or cognitive radio. The additional flexibility however is traded for self-created interference that degrades BER performance. In this paper a linear system description for GFDM is presented and three receiver methods are derived. An iterative interference cancellation technique allows to further improve the performance.**

***Index Terms*—flexible physical layer, multi-carrier systems, cognitive radio, machine-to-machine communication**

I. Introduction

In the area of wireless communications, the research fields cognitive radio (CR) and machine-to-machine (M2M) communication have emerged during the past years. Such novel applications introduce different requirements to cellular networks of the 5th generation (5G) than state-of-the-art systems like LTE or WiMAX. The flexibility to shape and structure the transmit signal is a key aspect of cognitive radio capabilities. A CR system needs to be able to aggregate spectrum white spaces of varying size that are scattered over a given bandwidth, whilst ensuring that neighbouring non-cognitve systems are not affected by spectral leakage in adjacent frequency bands [1]. M2M communication on the other hand brings a large number of different use cases with varying requirements [2]. A coarse classification can be done by distinguishing between M2M terminals with a strong power supply and battery driven devices. While aiming to maximize bandwidth efficiency in the first category in order to support higher data rates and serve more subscribers, for the second category minimizing communication overhead e.g. by loosening requirements to time and frequency synchronization allows to increase energy efficiency and battery lifetime. These aspects will gain importance for the design of 5G cellular systems.

Today's latest cellular technology, i.e. LTE, relies on orthogonal frequency division multiplexing (OFDM). Despite of its proven advantages, there are shortcomings that make it difficult for OFDM to address several of the above requirements. This includes spectral leakage, sensitivity to carrier frequency offsets and constrained bandwidth efficiency due to the large amount of cyclic prefix (CP) that is necessary to support frequency domain channel equalization. Therefore, novel concepts for multi-carrier communication are researched, and schemes like filter bank multi-carrier (FBMC) [3], interference avoidance transmission by partitioned frequency and time domain processing (IA-PFT) [4], as well as generalized frequency division multiplexing (GFDM) [5] are considered in the research community. All of these schemes can be classified as filter bank techniques and are related to the thoroughly investigated OFDM.

With GFDM we propose a generalization of OFDM, which introduces additional degrees of freedom when choosing the system parameters. The new scheme offers more flexibility by ordering the data in a two-dimensional time-frequency block structure, introducing flexible pulse shaping for the individual subcarriers and potentially reducing the amount of CP when compared to the amount of useful data, while still providing means for an efficient single-tap equalization in frequency domain. A technique called tail biting is employed to eliminate the need for additional guard periods that would be necessary in a conventional system, in order to compensate for filtering tails and prevent overlapping of subsequent symbols. However, adding more flexibility to the system is traded for the orthogonality of subcarriers. Using a pulse shape with strong frequency localization introduces self-created inter-symbol interference (ISI) and inter-carrier interference (ICI). This can be mitigated by employing interference cancellation techniques.

II. System Description

A. Transmitter

Starting from the general concept of multi-carrier transmission with pulse shaping a simple way to express the generation of the transmit signal has been found [5]. Consider a system according to Fig. 1 modeled in baseband that distributes complex valued data symbols $d_k[m]$ across K subcarriers and M symbols. Note that each subcarrier on its own is pulse shaped with a transmit filter $g_{\mathrm{Tx}}[n]$ and modulated with a subcarrier center frequency $e^{-j2\pi\frac{kn}{N}}$. To meet the Nyquist criterion, each symbol is sampled N times, leading to MN

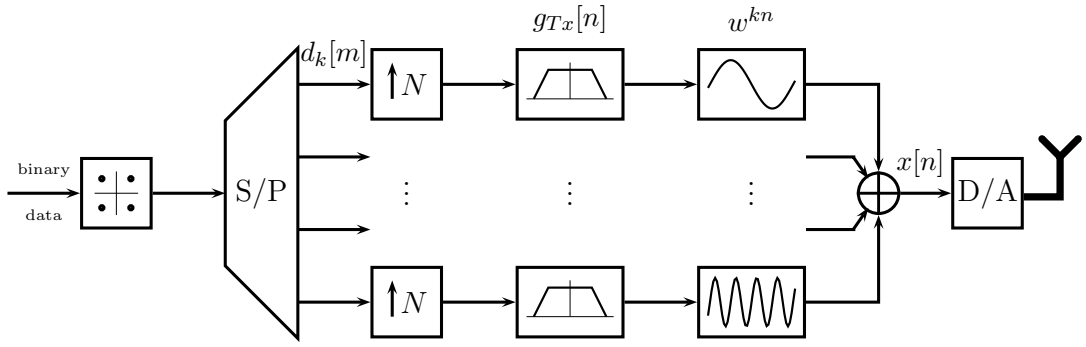

Fig. 1. GFDM baseband transmitter model.

samples per subcarrier. The transmit signal

$$x[n] = \sum_{m=0}^{M-1} \sum_{k=0}^{K-1} d_k[m]\, g_{\text{Tx}}[n - mN] e^{-j2\pi \frac{kn}{N}}, \qquad (1)$$

is obtained through superposition of all subcarriers. The filter $g_{\text{Tx}}[n]$ is chosen to be circular with periodicity n mod MN, which is necessary to enable tail biting [7] at the transmitter. By ordering the data symbols $d_k[m]$ in a column vector $\mathbf{d}$ and expressing the operations upsampling, pulse shaping, subcarrier upconversion and superposition as matrix operations, the model

$$\mathbf{x} = \mathbf{A}\mathbf{d} \qquad (2)$$

can be found for the modulation of GFDM data, wherein $\mathbf{x}$ contains the transmit time samples $x[n]$ and $\mathbf{A}$ is a $MN \times MN$ modulation matrix. Given a fixed subcarrier spacing, the elements of $\mathbf{A}$ depend on the pulse shape of the transmit filter.

B. Receiver

Suppose $\mathbf{y}$ is a vector containing the time samples $y[n]$ at the receiver, after the signal has passed through an additive white Gaussian noise (AWGN) channel. In that case

$$\mathbf{y} = \mathbf{x} + \mathbf{n}, \qquad (3)$$

where $\mathbf{n} \sim \mathcal{N}\left(0, \sigma_{\mathbf{n}}^2\right)$ is a noise vector containing AWGN samples.
Three commonly known methods for receiving the signal follow from (2).
The first way to receive a GFDM signal is constituted by finding a matrix $\mathbf{A}^+$ such, that $\mathbf{A}^+\mathbf{A} = \mathbf{I}$, where $\mathbf{I}$ is an identity matrix of corresponding size. Depending on the rank of $\mathbf{A}$, it can be computed as $\mathbf{A}^+ = \left(\mathbf{A}^{\text{H}}\mathbf{A}\right)^{-1}\mathbf{A}^{\text{H}}$ or $\mathbf{A}^+ = \mathbf{A}^{\text{H}}\left(\mathbf{A}\mathbf{A}^{\text{H}}\right)^{-1}$. Then

$$\hat{\mathbf{d}}_{\text{ZF}} = \mathbf{A}^+\mathbf{y} \qquad (4)$$

is the zero forcing (ZF) receiver.
A second way to process the GFDM signal is to apply a matched filter (MF) $\mathbf{A}^{\text{H}}$ at the receiver, which leads to

$$\hat{\mathbf{d}}_{\text{MF}} = \mathbf{A}^{\text{H}}\mathbf{y}. \qquad (5)$$

The corresponding block diagram is depicted in Fig. 3.
The third method is given by the linear minimum mean square error (MMSE) receiver

$$\hat{\mathbf{d}}_{\text{MMSE}} = \mathbf{A}^{\dagger}\mathbf{y} \quad \text{with} \quad \mathbf{A}^{\dagger} = \left(\frac{\sigma_{\mathbf{n}}^2}{\sigma_{\mathbf{d}}^2}\mathbf{I} + \mathbf{A}^{\text{H}}\mathbf{A}\right)^{-1}\mathbf{A}^{\text{H}}, \qquad (6)$$

which attempts to counteract the noise amplification known from the ZF receiver by balancing the variance of the noise $\sigma_{\mathbf{n}}^2$ samples and the data symbols $\sigma_{\mathbf{d}}^2$.
Note that in the absence of noise and a channel, the ZF receiver can reverse the crosstalk between different symbols and channels and thus recover the original data symbols, while the MF cannot. This becomes evident, particularly when looking at the composite response $\mathbf{A}^{\text{H}}\mathbf{A}$ in Fig. 2. The self created interference can be observed on the secondary diagonals, which denote contribution from neighboring subcarriers and time slots to a particular data symbol on the main diagonal. The MMSE exhibits similar behaviour, while the combined response of the ZF receiver has non-zero elements only on the main diagonal.

C. Bit Error Rate Performance

The BER performance in the presence AWGN is suitable to study the self induced interference in GFDM. The matched

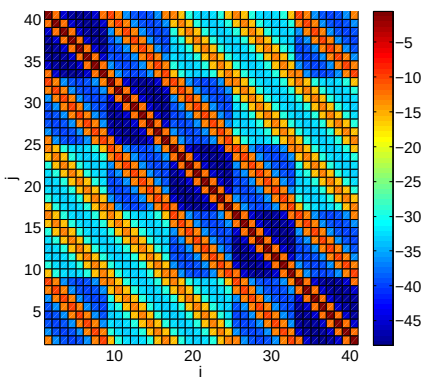

Fig. 2. Crosstalk response of the matched filter receiver in absence of noise. Each tile denotes the amplitude of $\left[\mathbf{A}^{\text{H}}\mathbf{A}\right]_{i,j}$ in dB. A root raised cosine filter with roll-off $\alpha = 0.5$ is used and $K = 8$, $M = 5$.

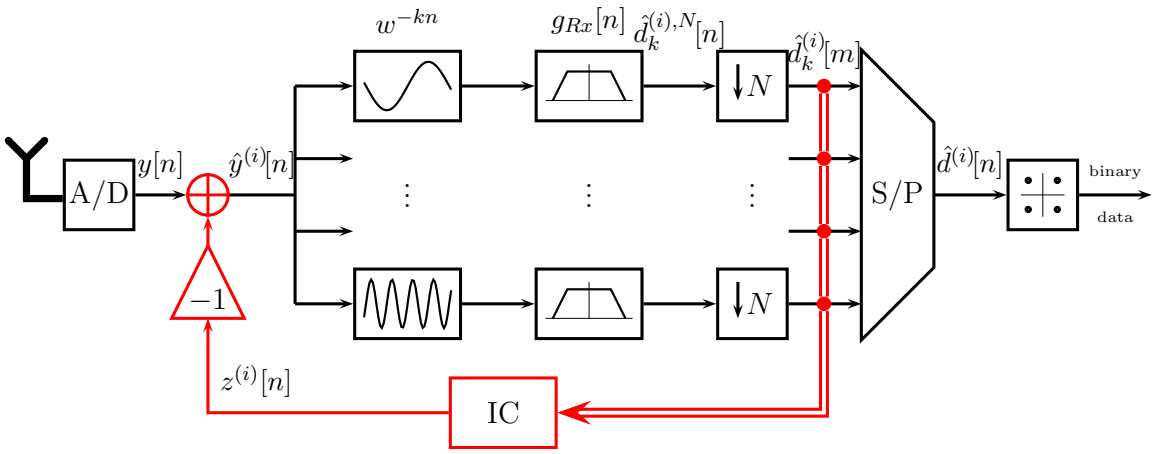

Fig. 3. GFDM matched filter receiver model (baseband) with interference cancellation (red).

filter curve in Fig. 4(a) exhibits a behavior that has been identified in previous work [8]. At low signal-to-noise ratio (SNR) the noise is dominant and the MF performance is close to the BER of OFDM. When the SNR increases, the self-induced interference remains and the BER deviates from the OFDM curve. This behaviour strongly depends on the choice of the pulse shaping filter, e.g. as seen in Fig. 4(b) increasing the roll-off factor also increases the SNR gap.
The behavior of the ZF receiver is different. While it can successfully reverse the self-induced interference, a constant SNR shift that is due to noise enhancement can be observed. How much the ZF curve deviates depends on $\mathbf{A}^{+}$. Again the roll-off factor has a strong impact. While there is a signficant deviation for $\alpha = 0.5$ in Fig. 4(b), the ZF curve nearly matches the OFDM performance in Fig. 4(a) where $\alpha = 0.1$.
Lastly, the MMSE outperforms MF and ZF, at the cost of higher computational complexity.

III. Interference Cancellation

The cross-talk of subcarriers and time slots that occurs in GFDM due to the non-orthogonal subcarriers degrades the bit error rate (BER) performance when compared to OFDM, as can be seen in Fig. 4. If RRC filters are used as transmit and receive filters, then only the adjacent subcarriers interfere causing ICI. With the interference cancellation technique described in the following, interferences from adjacent subcarriers can be successfully removed.

A. Double Sided Serial Interference Cancellation

With double sided serial interference cancellation (DSIC), interferences from both adjacent subcarriers are removed simultaneously. If k is the subcarrier of interest, the data on the $(k-1)$th and on the $(k+1)$th subcarriers are $\hat{d}_{k-1}^{(i)}[m]$ and $\hat{d}_{k+1}^{(i)}[m]$ respectively, where i is the sub-iteration index. Note that cleaning one subcarrier of ICI will be referred to as a sub-iteration, while cleaning all subcarriers once will be referred to as a (complete) iteration. Now, $\hat{d}_{k-1}^{(i)}$ and $\hat{d}_{k+1}^{(i)}[m]$ are sent to the interference cancellation (IC) unit as shown in Fig. 3, where they are mapped by a detector to the constellation grid, e.g. QPSK, to get $d_{k-1}^{(i),e}[m]$ and $d_{k+1}^{(i),e}[m]$. Thus, the data matrix in the IC unit, $\{d_k^{(i),e}[m]\}_{K\times M}$, has non-zero elements in rows $k-1$ and $k+1$. As illustrated in Fig. 5, this matrix then subject to transmitter processing, which remodulates the signals and the interference cancellation signal is obtained as

$$z^{(i)}[n] = \sum_{m=0}^{M-1} \sum_{k'=\{k-1,k+1\}} d_{k'}^{(i),e}[m] g_{Tx}[n-mN] w^{-k'n}, \tag{7}$$

where $w = e^{j2\pi\frac{1}{N}}$. The cancellation signal $z^{(i)}[n]$ is then subtracted from the received signal $y[n]$ to get $\hat{y}^{(i)}[n]$. This mitigates the intercarrier interference from subcarrier $k-1$ and $k+1$.
Now the interference cancelled signal, $\hat{y}^{(i)}[n]$, is again subject to GFDM receiver processing, i.e. digital subcarrier down conversion, filtering with the pulse shaping filter sampled response and down sampling to get the received data symbols for the kth subcarrier. Mathematically, this process can be expressed as follows

$$\hat{y}_k^{(i)}[n] = \hat{y}^{(i)}[n] w^{kn} \tag{8}$$

$$\hat{d}_k^{(i+1),N}[n] = \hat{y}_k^{(i)}[n] \circledast g_{Rx}[n] \tag{9}$$

$$\hat{d}_k^{(i+1)}[m] = \hat{d}_k^{(i+1),N}[n = mN]. \tag{10}$$

For cleaning the $(k+1)$th subcarrier, data symbols from the most recent sub-iteration are used.
Initially, all K subcarriers are detected. Then in the sub-iteration $i = 1$, the ICI due to both the adjacent Kth and the 2nd subcarriers are removed from the 1st subcarrier. The ICI cancelled subcarrier 1 is then detected. In the next sub-iteration, the cleaned 1st subcarrier and the ICI-effected 3rd subcarrier are used to cancel out the ICI on the 2nd subcarrier. Hence, the IC process continues in a similar fashion.

B. Complexity

From the point of view of complexity, let the forward and the cancellation branch complexity for each subcarrier be

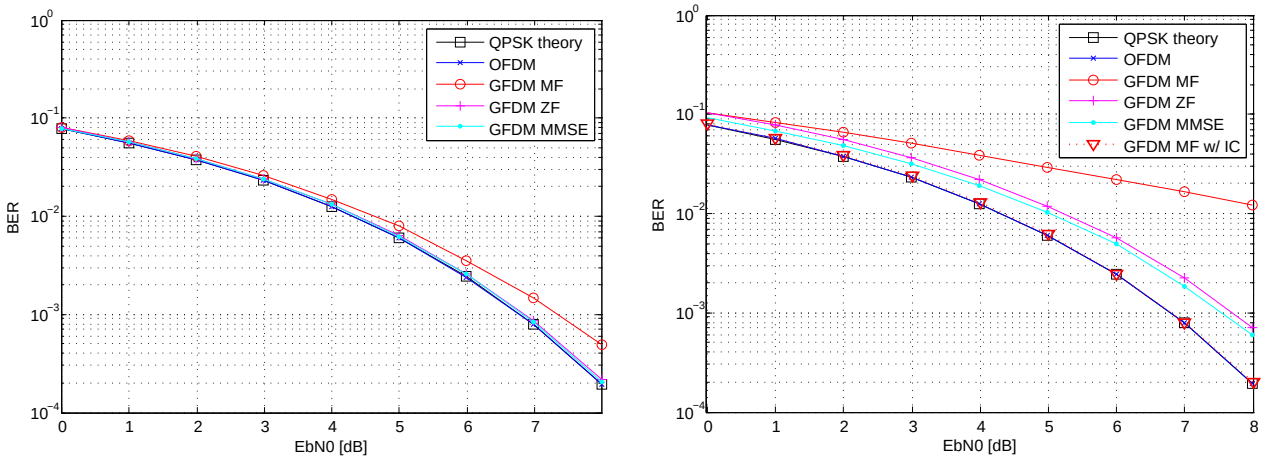

(a) $K = 128$, $M = 5$, $\alpha = 0.1$

(b) $K = 128$, $M = 5$, $\alpha = 0.5$

Fig. 4. BER of uncoded QPSK transmission through AWGN channels. A root raised cosine filter is used for pulse shaping.

denoted as C_f and C_c and let the number of iterations required to clean the signal of interference be I. When no interference cancellation is done, then the receiver complexity is KC_f. In DSIC, the K subcarriers are detected first with complexity KC_f. Then the ICI from adjacent subcarriers are removed simultaneously with two times forward and two times IC processing. Hence, for all K subcarriers and I iterations, the total complexity is $KC_f + KI(C_f + 2C_c)$.

C. Bit Error Rate Performance

This very simple cancellation scheme can already provide a large improvement in BER performance. As depicted in Fig. 4(b), the MF receiver with IC matches the BER of OFDM, while still providing the advantage of pulse shaped subcarriers. Altough not shown here, the scheme also works well with higher modulation orders, however then a larger number of iterations are required to reach the OFDM performance.

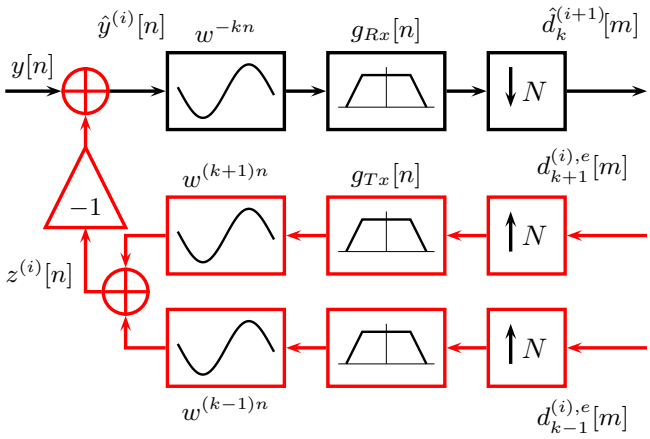

Fig. 5. Interference cancellation unit in detail.

IV. Conclusions

GFDM is a non-orthogonal multi carrier scheme, which provides pulse shaped subcarriers at the cost of self-created interference. The modulation of data can be modeled with the help of a modulation matrix that is computed based on a given pulse shaping filter and data block size. Based on the transmitter model, known ways of receiving the signal can be applied. However, all three standard methods may, depending on the system parameters, yield strong performance degradation when compared to OFDM. In that case an interference cancellation scheme can be applied to improve the performance significantly. An additional complexity cost of $KI(C_f + 2C_c)$ is incurred in the double sided IC compared to the MF scheme without interference cancellation.
Interesting topics for further investigation are the performance with more sophisticated channel models as well as the suitability of GFDM for sensing in cognitive radio applications.

Acknowledgement

This work has been performed in the framework of the ICT projects ICT-5-258512 EXALTED and FP7-ICT-2009-4/248454 QoSMOS, which are partly funded by the European Union.

References

[1] QOSMOS FP7 248454, "D4.1: Transceiver Archictectures and Requirements," Tech. Rep., 2010, *available at www.ict-qosmos.eu*.
[2] EXALTED FP7 258512, "D2.1: Description of Baseline Reference Systems, Scenarios, Technical Requirements & Evaluation Methodology," Tech. Rep., 2011, *available at www.ict-exalted.eu*.
[3] M. Bellanger, "FBMC Physical Layer: A Primer," Tech. Rep., 2010, *available at www.ict-phydyas.org*.
[4] H. Yamaguchi, "Active Interference Cancellation Technique for MB-OFDM Cognitive Radio," in Proc. of Microwave Conference 2004.
[5] N. Michailow, S. Krone, M. Lentmaier, and G. Fettweis, "Bit Error Rate Performance of Generalized Frequency Division Multiplexing," *submitted to VTC Fall 2012*.
[6] R. Datta, N. Michailow, M. Lentmaier, and G. Fettweis, "GFDM Interference Cancellation for Flexible Cognitive Radio PHY," *submitted to VTC Fall 2012*.
[7] G. Fettweis, M. Krondorf, and S. Bittner, "GFDM - Generalized Frequency Division Multiplexing," in *Proc. IEEE 69th Vehicular Technology Conf. VTC Spring 2009*.
[8] N. Michailow, M. Lentmaier, P. Rost, and G. Fettweis, "Integration of a GFDM Secondary System in an OFDM Primary System," in *Proc. Future Network & Mobile Summit 2011*.