LUND UNIVERSITY

Frost damage on concrete : estimation of the future deterioration - a contribution to the BRITE/EURAM project BREU-CT92-0591 "The Residual Service Life of Concrete Structures"

Fagerlund, Göran

1995

Link to publication

Citation for published version (APA):
Fagerlund, G. (1995). *Frost damage on concrete : estimation of the future deterioration - a contribution to the BRITE/EURAM project BREU-CT92-0591 "The Residual Service Life of Concrete Structures"*. (Report TVBM; Vol. 3067). Division of Building Materials, LTH, Lund University.

Total number of authors:
1

General rights
Unless other specific re-use rights are stated the following general rights apply:
Copyright and moral rights for the publications made accessible in the public portal are retained by the authors and/or other copyright owners and it is a condition of accessing publications that users recognise and abide by the legal requirements associated with these rights.
• Users may download and print one copy of any publication from the public portal for the purpose of private study or research.
• You may not further distribute the material or use it for any profit-making activity or commercial gain
• You may freely distribute the URL identifying the publication in the public portal

Read more about Creative commons licenses: https://creativecommons.org/licenses/

Take down policy
If you believe that this document breaches copyright please contact us providing details, and we will remove access to the work immediately and investigate your claim.

LUND UNIVERSITY

PO Box 117
221 00 Lund
+46 46-222 00 00

LUNDS TEKNISKA HÖGSKOLA
Byggnadsmaterial

UNIVERSITY OF LUND
LUND INSTITUTE OF TECHNOLOGY
Division of Building Materials

Frost damage on concrete
Estimation of the future deterioration

Göran Fagerlund

Report TVBM-3067
Lund 1995

CODEN: LUDTVDG/(TVBM-3067)/1-20/1995
ISSN 0348-7911

Frost damage on concrete
Estimation of the future deterioration

A contribution to the BRITE/EURAM project BREU-CT92-0591 "The Residual Service Life of Concrete Structures"

Göran Fagerlund

Report TVBM-3067
Lund 1995

Contents

	page
Preface	1
1. Introduction	2
2. Salt scaling	3
2.1 General	3
2.2 Definition of "surface scaling"	4
2.3 Estimation of the future salt scaling, based on extrapolation of observed damage	4
2.3.1 Homogeneous concrete	4
2.3.2 Non-homogeneous concrete	6
2.3.3 The environmental conditions have been changed during the life of the structure	8
2.4 Estimation of the future salt scaling based on scaling tests	8
3. Internal frost attack	10
3.1 General	10
3.2 Definition of "internal damage"	12
3.3 Estimation of the future internal frost damage based on extrapolation of observed damage	12
3.3.1 Concrete not permanently exposed to moisture	12
3.3.2 Concrete constantly exposed to moisture	15
3.3.3 The concrete is not yet frost damaged. The residual time until frost damage occure - the potential future service life	17
3.4 The future internal frost damage based on freeze/thaw tests	20
References. Part 2	20
List of reports within Task 2, "Freeze-Thaw"	20

Preface

This report is part of the BRITE/EURAM project BREU-CT92-0591 "The Residual Service Life of of Concrete Structures". Six partners are participating in the project:

1: British Cement Association, U.K. (The Coordinator)
2: Instituto Eduardo Torroja, Spain
3: Geocisa, Spain
4: The Swedish Cement and Concrete Research Institute, Sweden
5: Cementa AB, Sweden
6: Division of Building Materials, Lund University, Sweden

Three deterioration mechanisms are treated:

1: Corrosion of reinforcement
2: Freeze-thaw action[1]
3: Alkali-silica reaction

This report deals with freeze/thaw, and it refers to Task 4, "Assessment of deterioration rates".

Lund, June 1995

Göran Fagerlund

[1]) At the end of the report, there is a list of all reports produced within task 2, "Freeze-thaw action".

1. Introduction

Frost damage is of two types:

* *Salt scaling*, only affecting the surface of the concrete, while the interior is unharmed in most cases. This damage is obvious, and the extent of damage can be estimated visually. Salt scaling causes reduced bond, and reduced anchoring capacity. It reduces the service life with regard to corrosion of the reinforcement, and it causes troubles with the æsthetics[2]

* *Internal frost damage.* This causes loss in compressive strength and tensile strength, loss in E-modulus, loss in the bond strebgth and anchoring capacity. There are no linear relationships between the different types of damage. So for example, the loss in compressive strength is often somewhat bigger than the loss in E-modulus, or tensile trength.Therefore, all important mechanical properties must be measured, which is best done on drilled-out cores. The loss in bond can be correlated with the loss in strength; see Deliverable 28.1 to the BRITE/EURAM project; [1].

An extrapolation of the future evolution of damage can be done by two different methods[3] :

* Extrapolation of the observed destruction, at the time of inspection, and a theoretical extrapolation, based on known destruction mechanisms. This method is described below for both types of damage.

* Measurements of the actual level of frost resistance, using different test methods, and extrapolation of the future degradation. Possible methods are described below.

Generally, extrapolation based on observations is the best method.

2. Salt scaling

2.1 General

Salt scaling is a surface erosion, caused by a simultaneously acting salt solution at the surface, and freezing temperatures. Principally, there are three types of scaling; retarded, linear or accelerated; see Fig 1 taken from Deliverable 30.4 Part 1 to the BRITE/ EURAM project, [3]. Concretes with low degrees of salt scaling resistance in the actual environment, normally have an accelerated scaling. Therefore, they are

---

[2]) Salt scaling will have consequences for the future service life with regard to reinforcement corrosion. In order to estimate this effect, one must consider the following factors:
1: The previuos salt scaling before the time of inspection.
2: The future salt scaling
Theories for how to consider these factors are described in reference [2].

[3]) There is also an imaginable case where internal frost damage has not yet occurred, but might do so in the future. This case can also be analyzed by an approximate metod described in 3.3.3.

normally so severely damaged after rather few years, that service life predictions are hardly relevant (see footnote 29). Therefore, only linear or retarded scaling is of interest, and are the only destruction types treated below.

Surface scaling

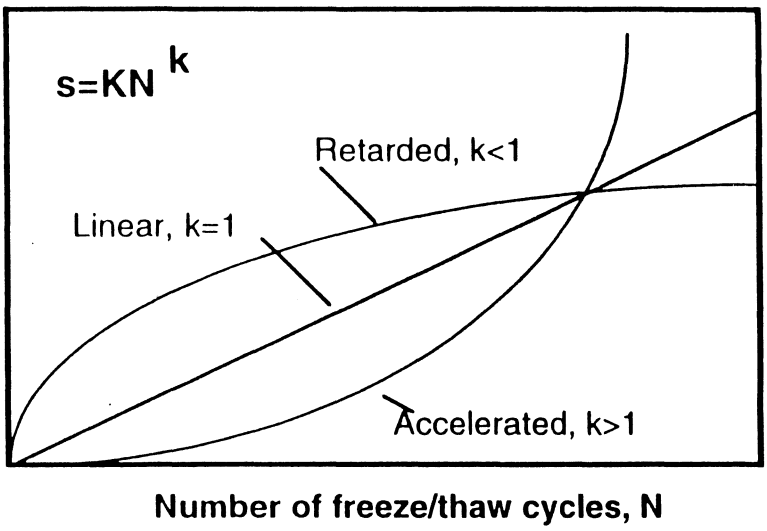

Fig 1: Linear, retarded and accelerated salt scaling in a salt scaling test.

Each freeze/thaw cycle, with the same characteristics as regards minimum freezing temperature, freezing rate and moisture condition, gives about the same amount of scaling. The scaling depends on the salt concentration, a concentration of about 3% being the most aggressive. The scaling is also depending on the minimum temperature reached during a freeze/thaw cycle. Tests made at Lund Institute of Technology (Deliverable 24.2 to the BRITE/EURAM project; [4]) indicate that the temperature dependency can be described by the following approximative formula:

$$\text{Scaling per freeze/thaw cycle} \approx \text{constant} \cdot |\theta_{min}|^2 \qquad (1)$$

This means that the relative scaling at -20°C, -10°C and -5°C is 1:0,25:0,06. It also means, that many more freeze/thaw cycles are required when the minimum temperature is high, than when it is low. 10 cycles at a temperature of -20°C correspond to about 50 cycles at -10°C and to about 150 cycles at -5°C.

Salt scaling only occurs in the cement paste phase. The aggregate grains are not scaled, provided they consist of normal dense material such as granite, quartzite, etc.

The future deterioration depends on the future environment, especially the exposure to salt. For a marine structure, the salt concentration will of course be unchanged, and, therefore, the rate of deterioration will be maintained on the same level as before. For a structure exposed to de-icing salts, a reduction of the amount of salting will completely change the future degradation. If the use of de-icing salts is stopped, there will be almost no more scaling. If it is increased, the rate of scaling can be assumed to be maintained on the same level as before.

In the following, it is assumed that the future environment is the same as before the inspection.

2.2 Definition of "surface scaling"

In order to predict the future scaling, one must be able to determine the actual scaling, s_0, at the time of inspection. The value of s_0 is included in **Eq (I)** used for extrapolation of the future degradation. The only method of determining the actual scaling depth is to try to identify the initial surface; either directly on the structure itself, or from information given in the original building documents.

Surface scaling is the scaling depth in a point, calculated from the initial surface above the same point. Therefore, since the scaling front is not perfectly smooth, the scaling will be different in different parts of the same concrete cover. Normally, it is the deepest scaling, i.e. the scaling in the cement mortar phase, that is determining the load carrying capacity, and that is determining other properties, of importance for the structural stability.

2.3 Estimation of the future salt scaling, based on extrapolation of observed damage

2.3.1 Homogeneous concrete

If the concrete is completely homogeneous, so that there is no separation layer at the surface, and the air-pore structure is the same across the entire cross section of the concrete, one can assume that the scaling has proceeded linearily. Certainly, the scaling is not completely linear, as is visualized in Fig 2. This depends on the fact that the aggregate grains are gradually undermined by the scaled cement paste. Therefore, there will be smaller or bigger "jumps" in the weight loss curve; the loss of a small grain will cause a small jump, and the loss of a coarse grain a big jump. Seen over a longer period, and/or over a larger surface area, the average scaling expressed in terms of the weight loss (kg/m^2) will, however, be linear.

This means that the future scaling can be extrapolated from the scaling s_0 observed at the time of inspection, t_0; see Fig 3. The increase in scaling depth Δs after time Δt counted from the time of inspection will be:

$$\Delta s \approx \frac{s_0}{t_0} \cdot \Delta t \qquad \text{(I)}$$

Example: *The estimated salt scaling after 30 years is 15 mm. Then, the additional scaling 20 years after the inspection will be (15/30)·20=10 mm.*

In reality, the scaling front is not sharp. One might, however, assume that the scaling rate in each point will be about the same as it has been "historically". Thus, the

general shape of the "scaling profile" will be maintained, but be more pronounced in the future.

One big problem is to define the actual scaling at the time of inspection. This can only be done by identifying the location of areas that are unscaled, and by comparing the actual shape and size of the member with these intended, as described on the drawings.

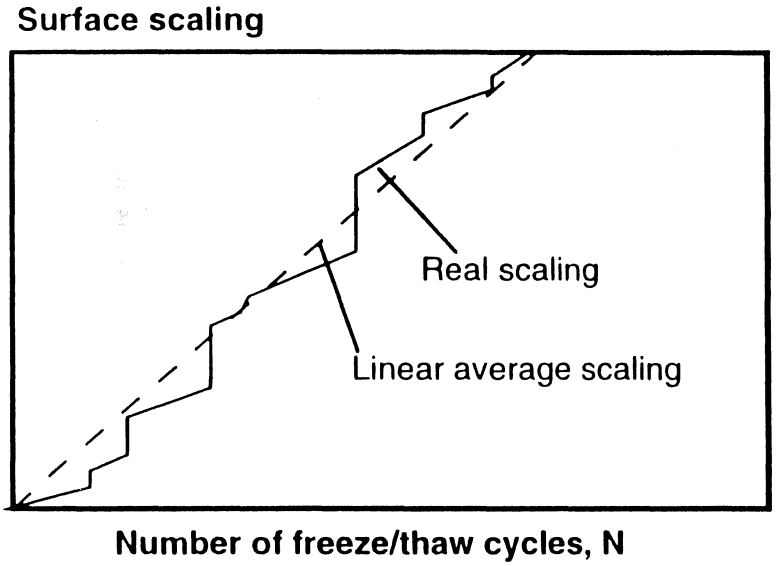

Fig 2: "Jumps" in a "linear" salt scaling curve, caused by the loosening of sand grains and stones.

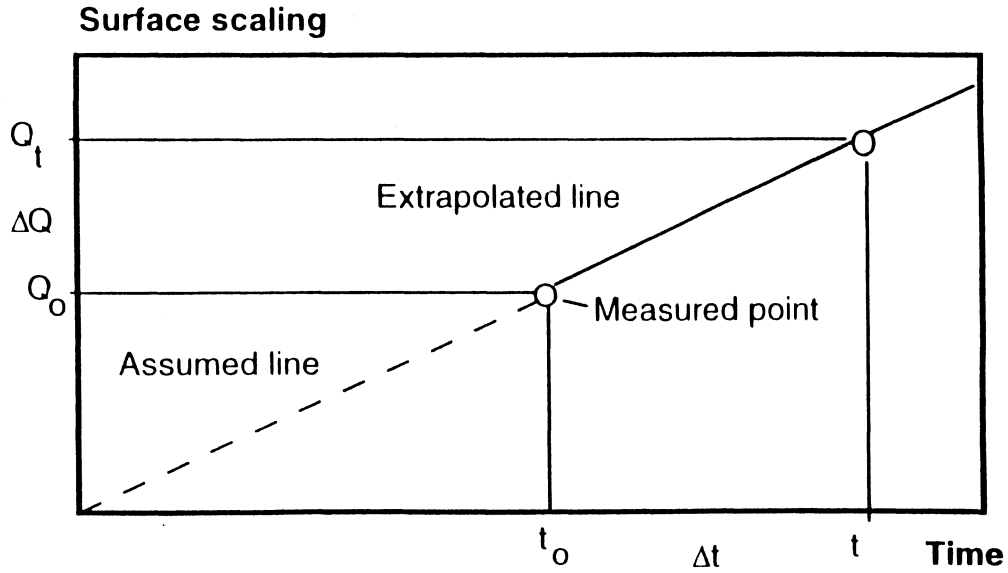

Fig 3: Extrapolation of the observed salt scaling

2.3.2 Non-homogeneous concrete

There are at least three types of heterogeneities, which might affect the extrapolation of the scaling curve:

* Water separation, and cement mortar segregation

* Different air-pore structure at the surface; normally, there is a lower air content at the surface, caused by air loss to the surface during compaction

* Bad curing of the concrete surface

Separated concrete:

Cement paste separation is normally only a couple of millimeters thick and can therefore be neglected.

Cement mortar separation can be quite big. One example is seen in Fig 4; [5]. The thickness of the separation layer is about 30 mm, which is the size of the coarse aggregate. The separation implies that the scaling front ought to be more smooth in the beginning, and that it might be more rough at the time of inspection. This is due to the fact, that it is only the cement paste phase, that is frost damaged. Thus, if one, at the time of inspection, measures the scaling depth counted from the upper level of the aggregate, the rate of this type of scaling has gradually decreased with time. If, however, one only considers the scaling depth of the mortar phase, this ought to have proceeded with about the same rate during the entire previous "life" of the structure.

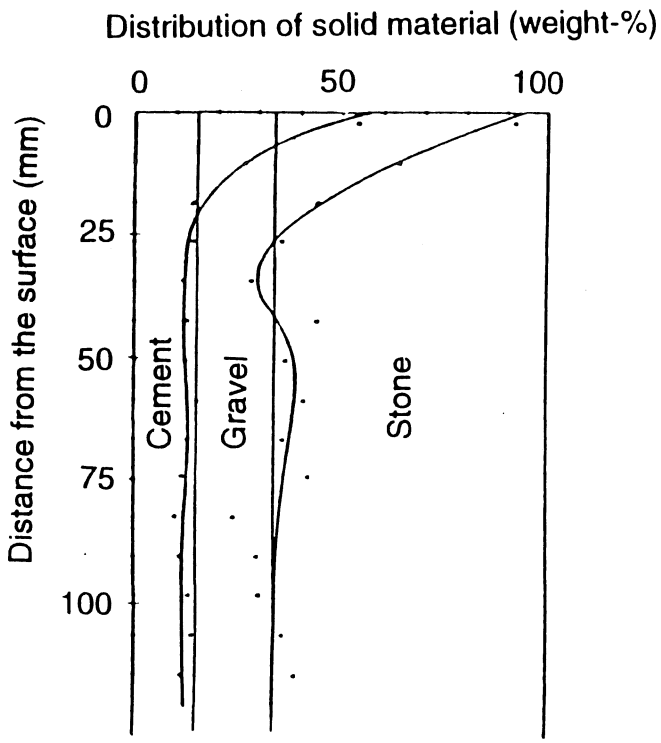

Fig 4: Measured variation in cement, sand and stone in the surface part of a concrete; [5].

The fact that a cement mortar contains more cement paste than a concrete will probably in many cases mean, that there is a retarded scaling during the first years, and not an accelerated scaling. This means that the future scaling, occuring after the time of inspection, will be somewhat exaggerated when one extrapolates the scaling according to the linear relation in **Eq (I)**; see Fig 5. Thus, **Eq (I)** is on "the safe side".

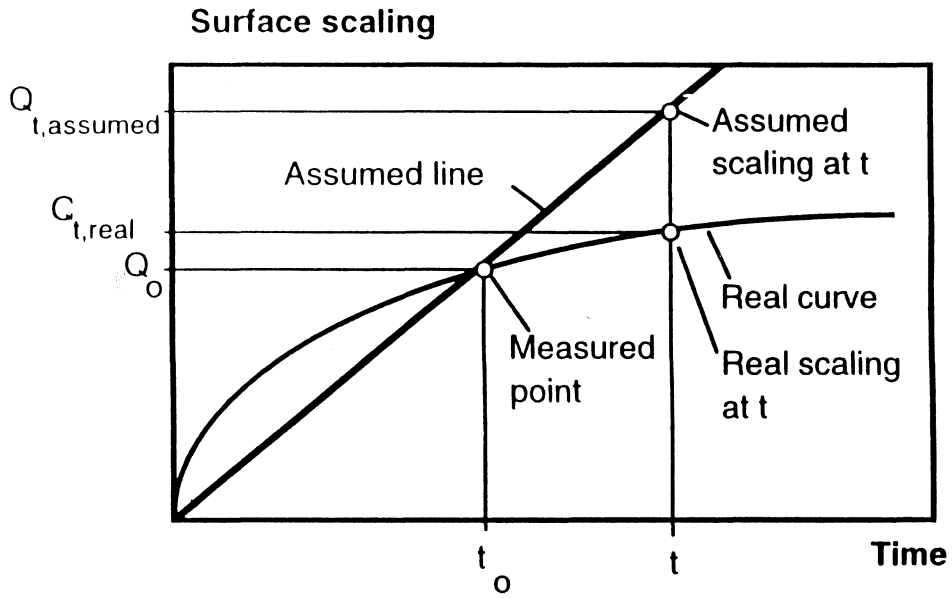

Fig 5: Linear extrapolation of retarded salt scaling, caused by inhomogeneities in the surface part of the concrete.

Air losses

In an upper surface, there will often be a certain loss of entrained air, and also a loss of entrapped air in non-air-entrained concrete. This, of course, brings about, that the salt scaling resistance is lower in the upper millimeters or centimeters. Thus, there will be a retarded scaling at the beginning, and the use of **Eq (I)** will lead to a pessimistic prediction of the future scaling rate.

Defective surface curing

Frost damage, and salt scaling, are not so much influenced by bad curing. There will, however, be a certain negative effect, leading to a retarded scaling during the first time, until the scaling has reached a depth where the concrete is better cured.

Conclusion:

All types of non-homogeneities will lead to a retarded salt scaling. Thus, eq **(I)** can be used also for the case of non-homogeneous concrete. It will lead to an extrapolated residual service life which is on the safe side.

$$\Delta s \leq \frac{s_o}{t_o} \cdot \Delta t \qquad \textbf{(Ia)}$$

2.3.3 The environmental conditions have been changed during the life of the structure

In some cases, the structure has been exposed to salts only during a certain period of its life. In such a case, one cannot rely upon an extrapolation of the observed scaling. A scaling test is required. This is described in the next paragraph.

2.4 Estimation of the future salt scaling based on scaling tests

The best method to determine the future salt scaling is to use the "historical" scaling, as described by **Eq (I)** above. There are, however, cases where this might be impossible; e.g. when the future environmental conditions will be changed, or when the conditions were changed long before the time of inspection. Four important cases can be observed:

No scaling is observed at the time of inspection:

1: De-icing salts has not been used in the past, but will be used in the future. Then, a concrete, that is not scaled at the inspection, might obtain very severe damage in the future. An extrapolation of "history" is very misleading.

Scaling is observed at the time of inspection:

2: De-icing salts have been used during the entire life of the structure, but will be used no more in the future. Then, salt scaling might be very much reduced, and an extrapolation of the "historic" scaling curve gives completely erronous, and too pessimistic information. There is, however, a certain salt accumulation in the pores, that might continue to cause a certain future scaling.

3: De-icing salts were used only during a certain period in the past, but not during a long time before the time of inspection. Therefore, there has been a certain scaling, but only at the beginning. Even in such a case, an extrapolation of the observed scaling will give a prediction that is too pessimistic.

4: De-icing salts have been used only during a period immediately preceding the time of inspection, but not when the concrete was younger. In such a case, an extrapolation of the observed scaling will give a too optimistic prediction.

One has a certain possibility to estimate the future salt scaling by making a salt scaling test. Then, cores with diameter not less than 10 cm (preferably 15 cm) are taken from the concrete. The length should be at least 10 cm. The specimens are exposed to a salt scaling test according to the Swedish Standard SS13 72 44, Procedure 4, in which the real external surface is exposed to 56 (or 112) day-long freeze/thaw cycles in 3% NaCl-solution, or in pure water, or in any other solution, such as sea water. The gradual weight loss is measured.

For a case where there will be no further use of de-icing salt, it is recommended to use pure water in the test. For a case where de-icing salts will be used in the future, it is recommended to use 3% NaCl-solution.

As described in paragraph 2.1, the minimum freezing temperature is important. Therefore, one shall use realistic temperatures. For Swedish climate, this is about -20°C. For British climate it might be -10°C.

If the concrete is sound, one will obtain a fairly linear scaling which is expressed in terms of dry weight loss, ΔQ (kg/m^2).

$$\Delta Q \approx K \cdot N \qquad (2)$$

Where K is the slope of the scaling curve. Normal values for a concrete with acceptable salt scaling resistance is K<0,02 (i.e. 56 cycles, or 2 months of testing, gives a scaling less than 1,1 kg/m^2). The weight loss can be transformed to a scaling depth, s (m), using the dry bulk density, γ ($\approx$2000 kg/m^3):

$$s = \Delta Q/\gamma \approx K \cdot N/\gamma \approx K \cdot N/2000 \qquad (3)$$

(For a concrete with acceptable scaling resistance, the maximum amount of scaling after 56 cycles, or 2 months of testing, is 0,56 mm)

It is not so easy to translate the observed scaling to a scaling in practice. Eq (1) shows, that it is only the cycles with low temperature, that create big damage. The number of such cycles is not so big. It can assumed to be about 10 each year (Deliverable 30.4 Part 1).

Then , the scaling Δs after additional Δt years, counted from the time of inspection, will be:

$$\mathbf{\Delta s = K \cdot 10 \cdot \Delta t/\gamma \approx K \cdot 10 \cdot \Delta t/2000} \qquad \mathbf{(II)}$$

Example: *The constant K observed in the test is 0,06. Then, the additional scaling after additional 30 years will be 9 mm.* [4]

---

[4]) With this high scaling in the test, a progressive scaling can be expected. Perhaps it can be expressed:

$$\Delta Q = K \cdot N^k$$

Where K and k are determined by the test. Then, the additional scaling after Δt years will be:

$$\Delta s = K \cdot (10 \cdot \Delta t)^k/2000$$

Example: *An experimental scaling curve is supposed to be described by a parabola:* $\Delta Q = 3 \cdot 10^{-4} \cdot N^2$ *Then, the scaling after 56 cycles (2 months of testing) is 0,94 kg/m^2 or 0,5 mm; i.e. an acceptable level, provided the scaling had been linear. After additional 30 years, according to the same procedure, the scaling should be* $\Delta s = 3 \cdot 10^{-3} (10 \cdot 30)^2/2000 = 0,135$ *m or 135 mm. This example shows, that accelerated scaling, in most cases, cannot be accepted.*

3. Internal frost attack

3.1 General

Internal frost attack occurs when the concrete is frozen in a more than saturated condition (Deliverables 18.6; 24. 2; 30.4 Part 2 to the BRITE/EURAM project; [6], [4], [7]). The critical moisture condition, expressed in terms of a critical degree of saturation, considering the whole pore space in the concrete, is a function of the air-pore distribution. It is also, to a certain extent, a function of the freezing conditions. For a mature concrete, and for given outer temperature conditions, the critical degree of saturation, S_{CR}, can be considered constant.

If frost damage shall occur, or not, depends on whether the outer moisture conditions are such, that the concrete can be more than critically saturated, or not. Tests show, that frost damage can be expressed in the following way:

$$S_{ACT} < S_{CR}: \qquad D = 0 \tag{4a}$$

$$S_{ACT} > S_{CR}: \qquad D = K_N \cdot (S_{ACT} - S_{CR}), \tag{4b}$$

Where D is "frost damage", S_{ACT} is the actually occurring degree of saturation, inside the concrete, and K_N is a "coefficient of fatigue" , that depends on the number of freeze/thaw cycles.

By "degree of damage" is meant the loss of strength, or E-modulus, in relation to the initial strength, or E-modulus.

This means that no damage will occur in a concrete, that is less than critically saturated, irrespectively of the number of freeze/thaw cycles. The amount of damage is, for a given number of freeze/thaw cycles, only a function of by how much the critical degree of saturation is transgressed.

The coefficient K_N has been determined experimentally, for concretes that are repetadly frozen and thawed. It seems as if it can be expressed by an equation of the following type:

$$K_N = \frac{A \cdot N}{B+N} \tag{5}$$

Where N is the number of cycles. A and B are empirical constants. A is the "fatigue limit", expressing the damage after an infinite number of freeze/thaw cycles with a constant degree of saturation.

Normal laboratory experiments, by repeated freeze/thaw, indicate that the fatigue effect is quite big. On the basis of one series of experiments, the following relation was obtained; see Fig 6 taken from Deliverable 24.2 of the BRITE/EURAM project; [4]:

$$K_N = \frac{1{,}2 \cdot N}{4+N} \qquad (6)$$

This means, that a concrete, which has an S_{ACT}-value that transgresses the S_{CR}-value by 0,10, will have a damage degree of 12% after 500 freeze/thaw cycles, corresponding to about 10 years of exposure.

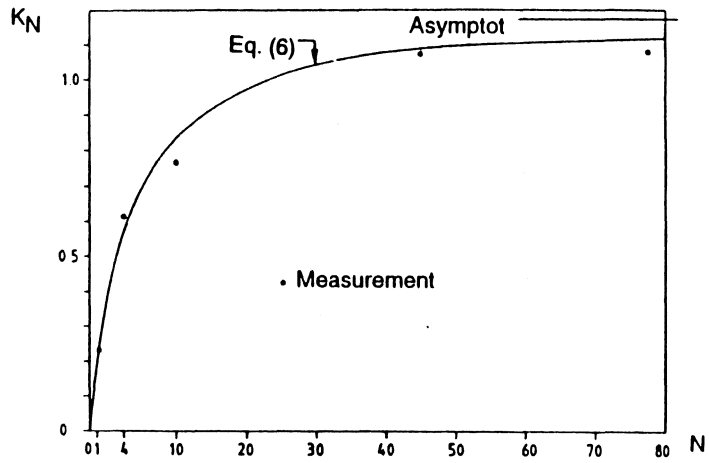

Fig 6: Experimental determination of the "coefficient of fatigue"; [4].

3.2 Definition of "internal damage"

In order to estimate the future damage, one must know the present degree of damage, D_0, at the time of inspection. D_0 is used in all the formulas below, used for prediction.

The damage must be based on coring of the structure, and determination of the resdual mechanical properties of these cores, such as strength and E-modulus. The measured values must be compared with values that should be expected for the actual structure, considering its age. The expected quality level can be estimated on basis of information of the concrete recipe, and strength level during the building phase. There is a big risk, however, that the expected, "undamaged", strength is over-estimated, which means that the actual damage level is also over-estimated. This will lead to a too pessimistic prediction of the future degradation. On the other hand, if the expected, "undamaged", quality level is under-estimated, one will believe that the concrete is not as badly damaged as it really is. Therefore, the future degradation will be under-estimated.

It is, therefore, important, that the estimation of the actual degradation, is performed by an experienced engineer. Not only strength measurements shall be used, but also investigations of the internal structure, revealing signs of frost damage, measurements of the potential frost resistance based on air-pore measurements and freeze-tests.

3.3 Estimation of the future internal frost damage based on extrapolation of observed damage

3.3.1 Concrete not permanently exposed to moisture

Many structures are exposed to intermittent "moisture load". Between each rain, or other exposure to free water, the concrete has time to dry. It is assumed that inner frost damage has occurred in a structure of this type. Then, we know that the condition for frost damage, $S_{ACT}>S_{CR}$, can exist. There are now two possibilities to consider:

Possibility 1: Unchanged inner moisture conditions in the future:

The moisture content inside the concrete will not be higher in the future than it has been in the past; i.e. the fact that the concrete is damaged will not cause an increase in the moisture uptake. Then, one can safely assume that the fatigue limit has been obtained long before the time of inspection, and that there will be no further frost damage. Thus, the future damage, D_t, is equal to the damage at the time of inspection, D_o, and the future strength (compressive, tensile or bond), F_t, will be equal to the strength at the time of inspection, F_o:

$$D_t = D_o \qquad \text{(IIIa)}$$

$$F_t = F_o \qquad \text{(IIIb)}$$

This is a "time-independent damage function". It is illustrated in Fig 7, Curve 1.

The degree of damage and strength at the time of inspection can be measured by traditional methods; strength tests on drilled out cores etc.

Possibility 2: The inner moisture content will gradually increase in the future:

The fact, that the concrete is frost damaged, might cause an additional moisture uptake. Therefore, the concrete will, according to Eq (4b), never reach its fatigue limit, until it is completely destroyed. Between each freezing, there is a certain self-healing, which means that the fatigue constant probably will be such, that a very high number of freeze/thaw cycles are required for destruction.

It can be assumed that frost damage has occurred already from the beginning; i.e when t=0. This means that $S_{CAP} = S_{CR}$ at the first freeze/thaw cycle. It is reasonable to assume that there has been the same moisture and temperature conditions in the past, as there will be in the future. Thus, by investigating the damage now, one can estimate the future damage.

It seems reasonable to assume, that there will be a certain increase in the water absorption between each freeze/thaw cycle, even in a case where the concrete has a possibility to dry between the cycles, and even in a case where the absorption time before different freeze/thaw cycles is unchanged. The reason for this is, that freezing causes a gradual cracking of the specimen. This causes an increase in the diffusivity of dissolved air from air-pores, and an increase in the diffusivity of water, flowing into

the concrete. According to an analysis performed in Deliverable 18.5 to the BRITE/EURAM project, [8], , the water absorption is almost directly proportional to the square-root of the diffusivity. Therefore, the water absorption between each cycle, ΔS_{ACT}, can be assumed to be proportional to the square-root of the number of freeze/thaw cycles:

$$\Delta S_{ACT} = \alpha \cdot N^{1/2} \tag{7}$$

Where α is a constant. Then, the degree of saturation in the specimen is:

$$S_{ACT} = S_{CR} + \Delta S_{CAP} = S_{CR} + \alpha \cdot N^{1/2} \tag{8}$$

Then, using Eq (4b) the following approximative relation for the development of damage can be used:

$$D = \frac{A \cdot N}{B+N} \cdot \alpha \cdot N^{1/2} = \frac{A \cdot \alpha \cdot N^{3/2}}{B+N} \tag{9}$$

The number of freeze/thaw cycles is assumed to be constant over the years. Then, N can be exchanged for time of exposure:

$$N = \beta \cdot t \tag{10}$$

Where β is the number of "aggressive" freeze/thaw cycles each year.

Consequently, the damage equation can be written:

$$D_t = \frac{A \cdot \alpha \cdot (\beta \cdot t)^{3/2}}{B+\beta \cdot t} \tag{11}$$

The values of A and B are uncertain. The values used in Eq (6) are used. The number β of freeze/thaw cycles is assumed to be 50. Then it is valid:

$$Dt = \frac{1{,}2 \cdot \alpha \cdot (50 \cdot t)^{3/2}}{4+50 \cdot t} \tag{12}$$

By measuring the actual degree of damage D_0 at the time of inspection t_0, the coefficient α kan be evaluated. The general equation is:

$$\alpha = \frac{D_0 \cdot (B+\beta \cdot t_0)}{1{,}2(\beta \cdot t_0)^{3/2}} \tag{13}$$

Then, α is used in Eq (12) for calculating the continued inner frost damage.

Example: *A concrete has a damage degree of 20% after 30 years of exposure. Then, the coefficient α is:*

$$\alpha=0,20(4+50\cdot30)/1,2(50\cdot30)^{3/2}=0,0043$$

The total damage after 20 years more (50 years in total) is:

$$D_{50}=1,2\cdot0,0043\cdot(50\cdot50)^{3/2}/(4+50\cdot50)=0,26 \quad (26\%)$$ [5]

The equation, and the example, show that the rate of the increase in frost damage is retarded. For long times, the damage function becomes almost directly proportional to the square-root of the exposure time:

$$D_t \approx 1,2\cdot\alpha\cdot(\beta\cdot t)^{1/2} \approx \kappa\cdot t^{1/2} \qquad \text{(IV)}$$

Where the coefficient $\kappa=1,2\cdot\alpha\cdot\beta^{1/2}$

This is a "square-root damage function". It is illustrated in Fig 7, Curve 2.

This means that the additional damage ΔD after the additional time Δt is:

$$\Delta D = t_o^{1/2}\cdot\{[\Delta t/t_o +1]^{1/2} -1\}\cdot\kappa \qquad \text{(V)}$$

3.3.2 Concrete constantly exposed to moisture

A concrete structure can be constantly exposed to moisture. This is the case for columns in the splash zone, or for structures, sucking water from a reservoar, or from the ground-water level. Then, the moisture content will increase gradually.

An analysis of the water absorption process in concrete indicates that the water absorption can be approximately described by a square-root relationship (Deliverable 12.5 of the BRITE/EURAM project; [9]):

$$S_{CAP} = S_{CR} + \gamma\cdot t^{1/2} \qquad (14)$$

Where γ is a coefficient, that depends on the permeability of the concrete. It is individual for each structure. It is assumed to be independent of the concrete age. As said above, the gradual damage will also increase the diffusivity of the concrete. This means, that the degree of saturation increases more rapidly than expressed by Eq (14). The following relation can be used:

$$S_{CAP} = S_{CR} + \gamma\cdot t^{1/2}\cdot\alpha\cdot N^{1/2} = S_{CR} + \varepsilon\cdot t^{1/2}\cdot N^{1/2} \qquad (15)$$

---

[5]) The number of freeze/thaw cycles per year, expressed by the coefficient β, is not so important for the calculation. If β=10 is used instead of β=50, the α-value according to Eq (13) is changed to 0,0098, but the damage after 50 years is still the same, 26%

Where $\varepsilon=\alpha\cdot\gamma$, which is a constant that is individual for each concrete.

S_{CR} was assumed to occur already at the first freeze/thaw cycle. Then Eq (15) can be written

$$D_t = K_N \cdot \varepsilon \cdot t^{1/2} \cdot N^{1/2} \tag{16}$$

Or, after inserting the fatigue function:

$$D_t = \frac{A \cdot N}{B+N} \cdot \varepsilon \cdot t^{1/2} \cdot N^{1/2} = \frac{A \cdot \varepsilon \cdot t^{1/2} \cdot N^{3/2}}{B+N} \tag{17}$$

The number of freeze/thaw cycles is assumed to be constant over the years; see Eq (10). Consequently, the damage equation can be written:

$$D_t = \frac{A \cdot \varepsilon \cdot \beta^{3/2} t^2}{B+\beta \cdot t} \tag{18}$$

The fatigue equations in Eq (6) is used. The number β of freeze/thaw cycles is assumed to be 50. Then, it is valid:

$$Dt = \frac{1{,}2 \cdot \varepsilon \cdot (50)^{3/2} \cdot t2}{4+50 \cdot t} = \frac{424 \cdot \varepsilon \cdot t2}{4+50 \cdot t} \tag{19}$$

By measuring the actual degree of damage, D_o, at the time of inspection, t_o, the coefficient ε kan be evaluated. The general equation is:

$$\varepsilon = \frac{D_o \cdot (B+\beta \cdot t_o)}{A \cdot \beta^{3/2} \cdot t^2} \tag{20}$$

Then, ε is used in Eq (19) for calculating the continued inner frost damage.

Example: *A concrete has a damage degree of 20% after 30 years of exposure. The coefficient ε is:*

$\varepsilon=0{,}20(4+50\cdot30)/1{,}2\cdot50^{3/2}\cdot30^2=7{,}9\cdot10^{-4}$

The total damage after 20 years more (totally 50 years) is:

$D_{50}=1{,}2\cdot7{,}9\cdot10^{-4}\cdot50^{3/2}\cdot50^2/(4+50\cdot50)=0{,}33$ *(33%)* [6]

[6]) The number of freeze/thaw cycles per year expressed by the coefficient β is not so important for the calculations. If β=10 is used instead of β=50, the ε-value according to Eq (20) is changed to $1{,}8\cdot10^{-3}$, but the damage after 50 years is almost the same, 34%

The equation, and the example, show that the rate of the increase in frost damage is linear for long times of exposure.

$$D \approx 1{,}2 \cdot \varepsilon \cdot (\beta)^{1/2} \cdot t \approx \lambda \cdot t \qquad \text{(VI)}$$

Where the coefficient $\lambda = 1{,}2 \cdot \varepsilon \cdot \beta^{1/2}$

This is a "linear damage function". It is illustrated in Fig 7, Curve 3.

This means that the additional damage, ΔD, after the additional time, Δt, is:

$$\Delta D = \lambda \cdot \Delta t \qquad \text{(VII)}$$

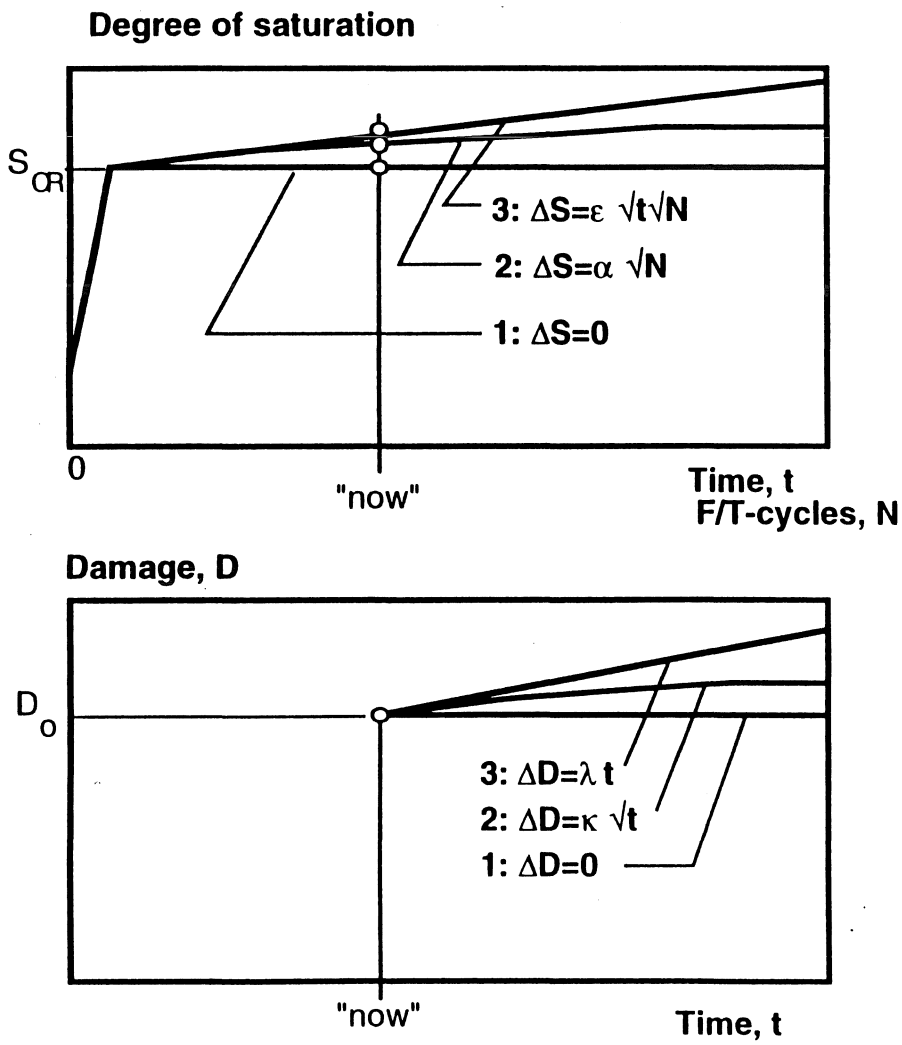

Fig 7: Three different possibilities of extrapolating the damage curve.

3.3.3 The concrete is not yet frost damaged. The residual time until frost damage occurs - the potential future service life

Sometimes it might be, that a concrete is not yet damaged by frost, but it is placed in a very wet environment, which means that there might be frost damage in the future. This case can be analysed by the method described in Deliverable 12.5 of the BRITE/EURAM project; [8].

Cores are drilled out and used for two types of test:

1: The critical degree of saturation, S_{CR}, is determined by the so-called S_{CR}-method described in [9]. This can be done by measurements of the dilation of a specimen during a freeze/thaw cycle. The degree of saturation is increased gradually in the specimen, until a dilation can be observed. The test can also be made by multi-cycle freeze/thaw of a series of specimens containing differen amounts of water.

2: The capillary degree of saturation, S_{CAP}, is determined by a capillary absorption test on slices sawn from the cores. This test is run for about 1 month. It was shown in Deliverable 12.5, [8], that S_{CAP} can be described by:

$$S_{CAP} = A + B \cdot t^{C} \qquad (21)$$

Where A, B and C are constants, that are determined by a regression analysis of the water uptake curve.

The potential service life is calculated by the following equation which is based on the condition that $S_{CAP}=S_{CR}$:

$$t_{pot} = \{(S_{CR} - A)/B\}^{1/C} \qquad \text{(VIII)}$$

Then, theoretically, the residual service life until frost damage starts is:

$$t_{residual} = t_{pot} - t_o \qquad \text{(IX)}$$

Where t_o is the age of the concrete at the inspection.

It might be, that the real moisture content of the structure at t_o is different from the calculated, due to the fact that the latter is based on rather unrealistic conditions of constant temperature and un-interrupted water uptake. It might even be, that t_{pot} is shorter than the age of the structure, which is of course not possible if the concrete is unharmed by frost. The reason is, of course, that the outer conditions are not as moist in reality, as they are in the capillary test. In such a case, there is another possibility of calculating the residual service life, taking the real moisture conditions into considerations. This will be shown below.

The moisture content is determined for the structure and is translated to a degree of saturation, $(S_{CAP})_o$. The age to of the structure is known. The theoretical degree of saturation determined by the suction test is calculated:

$$(S_{CAP})_{o,theory} = A + B \cdot t_o^{\,C} \qquad (22)$$

If the concrete has been wet all the time, the following relation should be valid:

$$(S_{CAP})_{o,real} = (S_{CAP})_{o,theory} \qquad (23)$$

Deviations indicate that the water uptake occurrs in another manner than in an isothermal suction test. On basis of the water content at inspection, one can calculate the real water uptake by the following equation:

$$(S_{CAP})_{real} = A + B_{real} \cdot t^{C} \qquad (24)$$

Where the coefficients A and C, which are mostly depending on the air-pore structure and diffusivity, are taken from the absorption experiment. B on the other hand is the rate-determining constant, that is supposed to depend mostly on the outer moisture conditions. This means, that the coefficient B_{real} can be calculated by:

$$B_{real} = \frac{(S_{CAP})_{o,real} - A}{t_o^{\,C}} \qquad (25)$$

Where $(S_{CAP})_{o,real}$ is the degree of saturation at the inspection. Thus, the real service life of the structure, in its real environment, will be:

$$\mathbf{t_{life} = \{(S_{CR} - A)/B_{real}\}^{\,1/C}} \qquad \mathbf{(X)}$$

And the residual service life will be:

$$\mathbf{t_{residual} = t_{life} - t_o} \qquad \mathbf{(XI)}$$

This is illustrated in Fig 8.

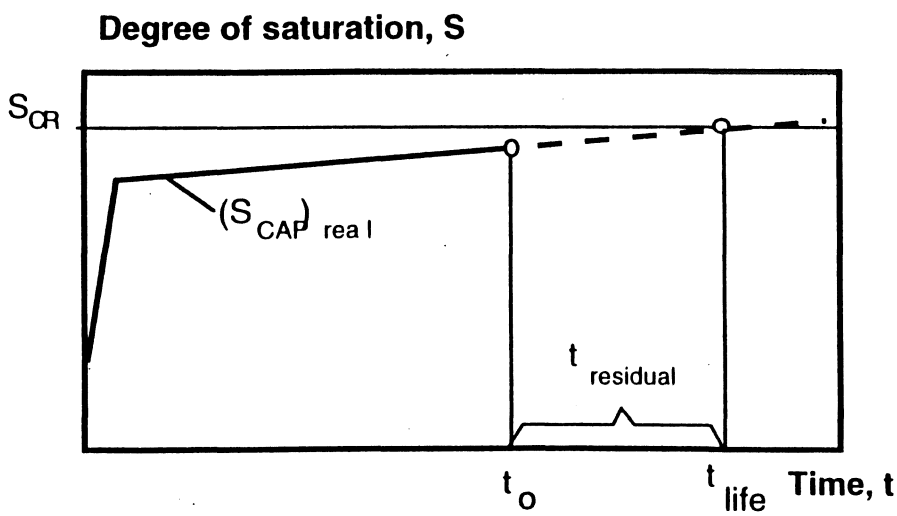

Fig 8: Illustration of the residual service life

3.4 The future internal frost damage based on freeze/thaw tests

The most safe prediction is based on a mesaurement of the actual damage, and use of the extrapolation techniques desribed above. The *"time independent damage function"* according to **Eq (III)**, *"the square-root damage function"* according to **Eq (IV)** or *"the linear damage function"* according to **Eq (VI)**, depending on the wetness of the environment.

There is no good, traditional, freeze/thaw method by which one can obtain the service life. The most widely used method is the American method ASTM C666. In this, cores are exposed to rapid freezing and thawing in water, or freezing in air and thawing in water. The loss in fundamental frequency of transverse vibration (which is a function of the loss in weight and E-modulus) is measured. The method has, however, no known relation with the destruction in the field. It will only tell whether the concrete is "excellent", "good", "fair", "average" or "bad". The way it behaves in practice, depends on the wetness around the concrete. A concrete, that is "bad" in the test, might be "good" in reality, simply because the real environment is more dry than in the test.

The S_{CR}-method is a non-traditional test method, which gives information of the so-called potential service life. The method was described above in paragraph 3.3.3.

A determination of the critical degree of saturation, and of the capillary absorption process, gives information of the time the concrete can absorb water without obtaining frost damage. This is the "potential service life". This time can be compared with the length of the periods during which the concrete takes up water without any possibility to dry. If the real absorption time is much shorter than the potential service life, one can assume, that the concrete will not be harmed by frost in the future. If the suction times are of the same order of size as the potential service life, one can assume that frost damage might occur during periods which are both wet and cold. If the actual absorption times are much higher than the potential service life, one can assume that the concrete is vulnerable to frost damage in the future.

Additional information is provided by measurements of the moisture content of the concrete in-situ. If the actual degree of saturation is close to the critical degree of saturation , or if it is higher, the risk of frost damage is very big. In such a case, the structure is, however, probably already frost damaged, and the extrapolation methods described above can be used.

References

[1] G Fagerlund, M Janz, B Johannesson: Effect of frost damage on the bond between reinforcement and concrete. Div. of Building Materials, Lund Institute of Technology, Manuscript, Lund 1994. *(BRITE/EURAM Deliverable 28.1)*

[2] G Fagerlund, G Somerville, K Tuutti: The residual service life of concrete exposed to the combined effect of frost attack and reinforcement corrosion. Contribution to the International Conference "Concrete across Borders", Odense 22-25 June, 1994.

[3] G Fagerlund: Freeze-thaw resistance of concrete. Mechanisms, influencing factors, test methods, quality control. Div. of Building Materials, Lund Institute of Technology, Report TVBM-3060, Lund 1995. *(BRITE/EURAM Deliverable 30.4 Part 1)*

[4] G Fagerlund: Influence of environmental factors on the frost resistance of concrete. Div. of Building Materials, Lund Institute of Technology, Report TVBM-3059, Lund 1994. *(BRITE/EURAM Deliverable 24.2)*

[5] C.H. Aste, O.W. Blümel: Segregation. Mitteilungen aus dem Institut für Baustofflehre und Materialprüfung an der Universität Innsbruck. Jahresbericht 1975/76.

[6] G Fagerlund: The critical spacing factor. Div. of Building Materials, Lund Institute of Technology, Report TVBM-7058, Lund 1993. *(BRITE/EURAM Deliverable 18.6)*

[7] G Fagerlund: Interrelations between the service life and the air content of concrete exposed to freeze/thaw. Div. of Building Materials, Lund Institute of Technology, Lund 1995. *(BRITE/EURAM Deliverable 30.4 Part 2)*

[8] G Fagerlund: The long time water absorption in the air-pore structure of concrete. Div. of Building Materials, Lund Institute of Technology, Report TVBM-3051, Lund 199?. *(BRITE/EURAM Deliverable 12.5)*

[9] G Fagerlund: The critical degree of saturation method of assessing the freeze/thaw resistance of concrete. Materials and Structures, Vol 10, No 58, 1977.

List of reports within Task 2, "Freeze-Thaw"[7]

All reports are prepared by the present author, except Deliverable 12.1, which is prepared by the present author in collaboration with Göran Hedenblad.

All reports are published during the period 1993-1995.

* **Deliverable 12.1:**	Calculation of the moisture-time fields in concrete.
* **Deliverable 12.5:**	The long-time water absorption in the air-pore structure of concrete
* **Deliverable 18.6:**	The critical spacing factor
* **Deliverable 24.2:**	Influence of environmental factors on the frost resistance of concrete
* **Deliverable 28.1:**	Effect of frost damage on the bond between reinforcement and concrete
* **Deliverable 30.1:**	Frost Damage on concrete. Assessment of the current state of the structure.
* **Deliverable 30.4 Part 1:**	Freeze-thaw resistance of concrete. A survey of destruction mechanisms, technological factors, test methods
* **Deliverable 30.4 Part 2:**	Interrelations between the service life, and the air content of concrete exposed to freeze-thaw
* **Deliverable 30.4 Part 3:**	Frost action on concrete. Estimation of the future deterioration (The present report)

[7]) A large number of reports have also been produced within the two other tasks, "Corrosion of Reinforcement", and "Alkali Silica Reaction". The whole project will be summed up in a manual.